WRB door mounted.pdf 7 2023-02-23 12:51:54

Door Center

R

L

Suitable for the following Cabinet Widths. For Imperial sized cabinets with 5/8" sides please refer to the related Metric positioning:

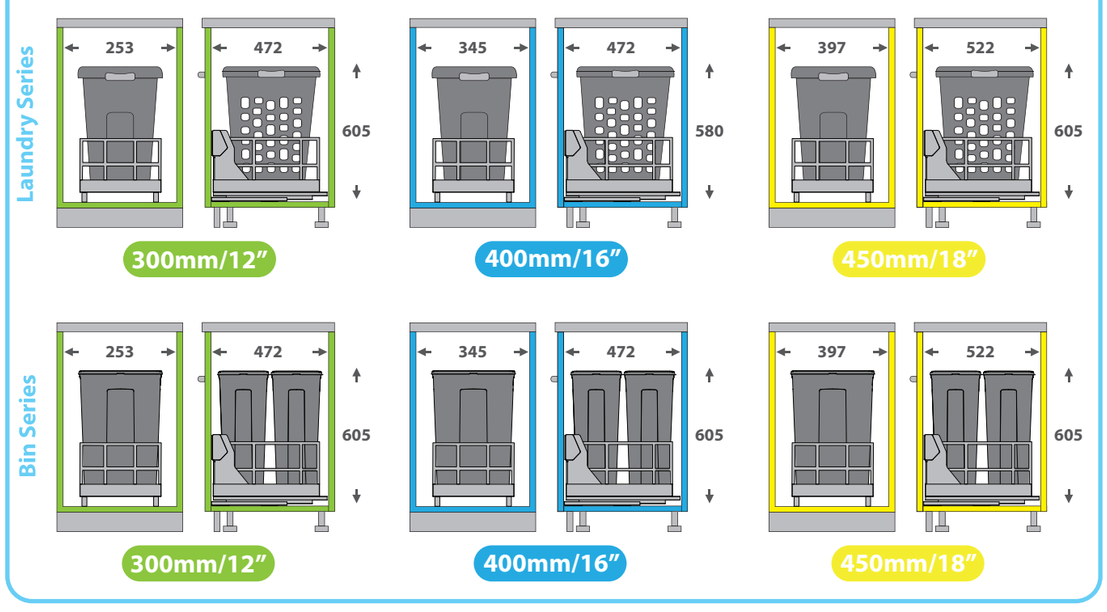

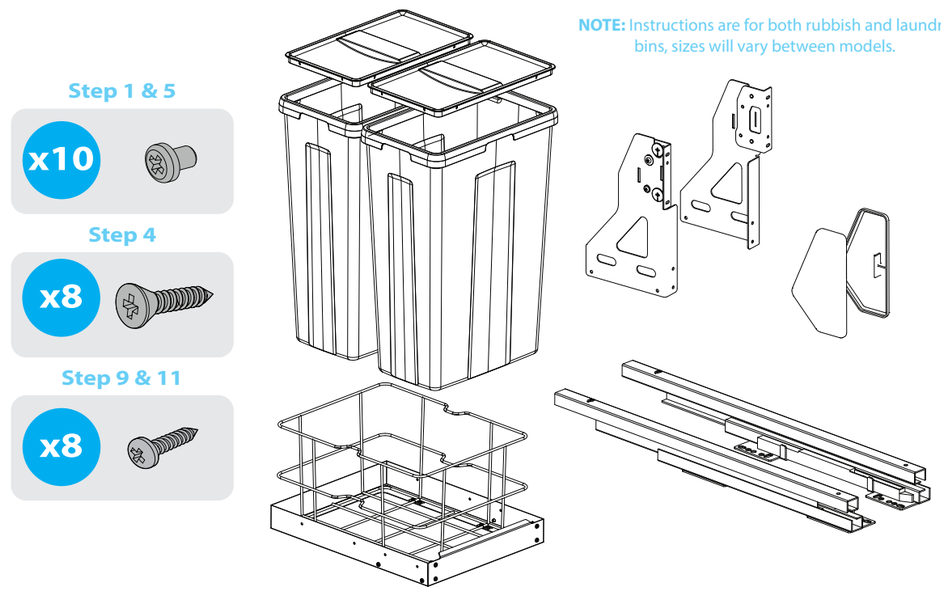

NOTE: Instructions are for both rubbish and laundry bins, sizes will vary between models.

218mm

189 mm
163 mm
117 mm

450mm Cabinet
400mm Cabinet
300mm Cabinet

Step 7 450mm Cabinet
Step 7 400mm Cabinet
Step 7 350mm Cabinet

85mm

1

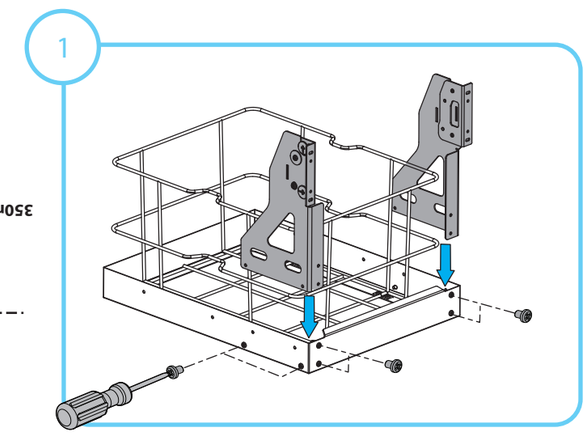

Attach door arms to the lower tray.

2

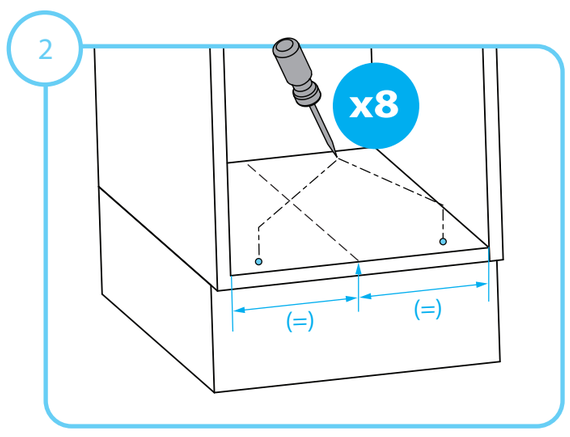

Measure centre of cabinet. Use template to mark bracket holes with awl in bottom of cabinet.

3

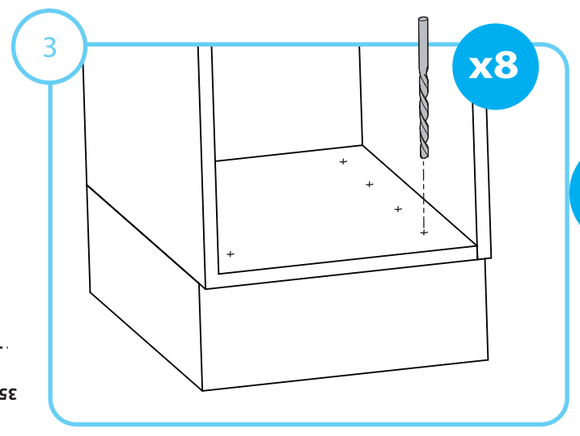

Drill bracket holes in bottom of cabinet.

4

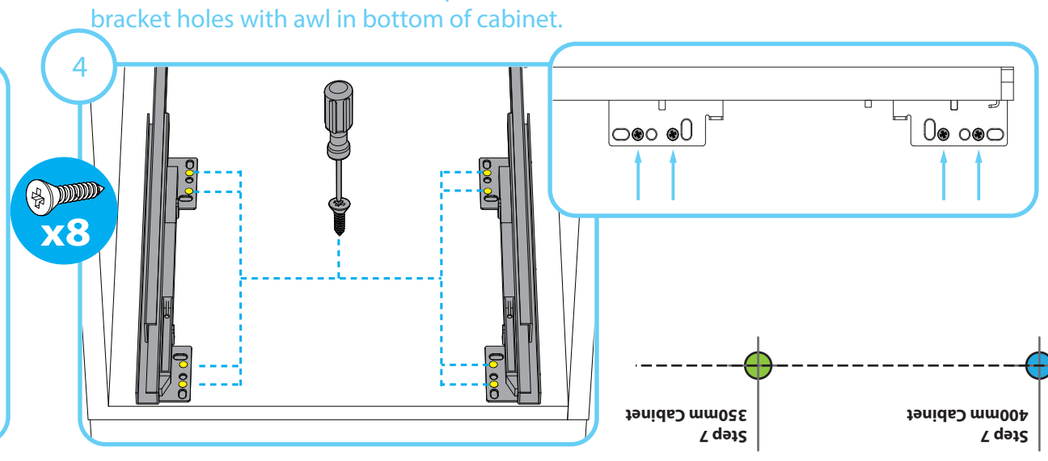

Screw brackets to bottom of cabinet.

5

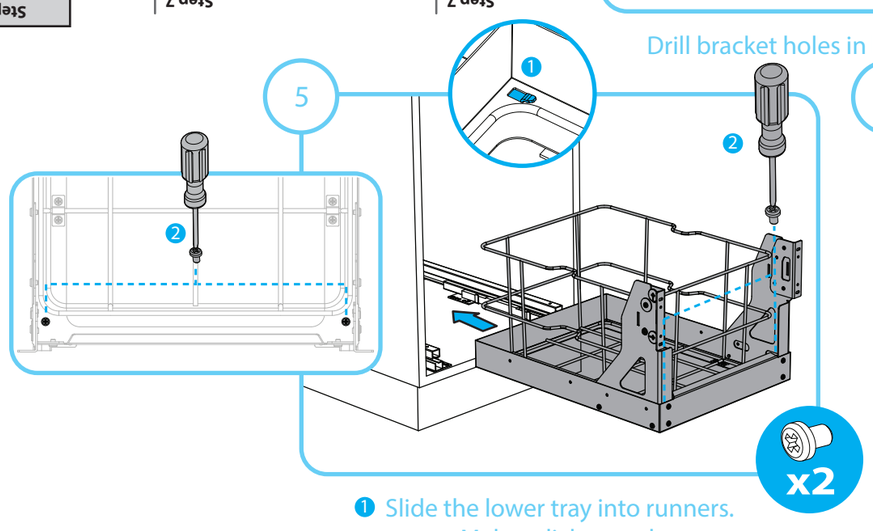

❶ Slide the lower tray into runners. Makes click sound.
❷ Screw lower tray to runner.

6

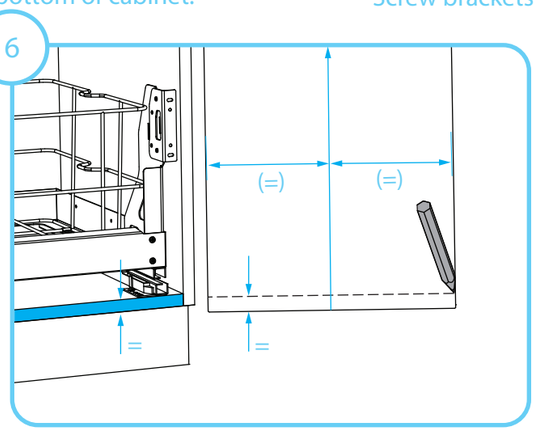

Measure and mark the centerline and the horizontal line from the bottom of the door.

7

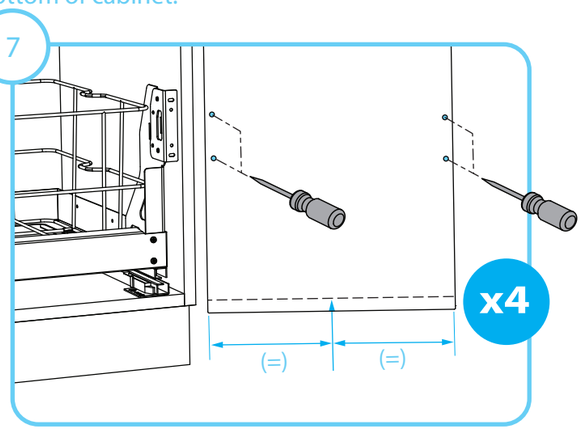

Measure centre of door. Use template to mark bracket holes with awl on the door.

8

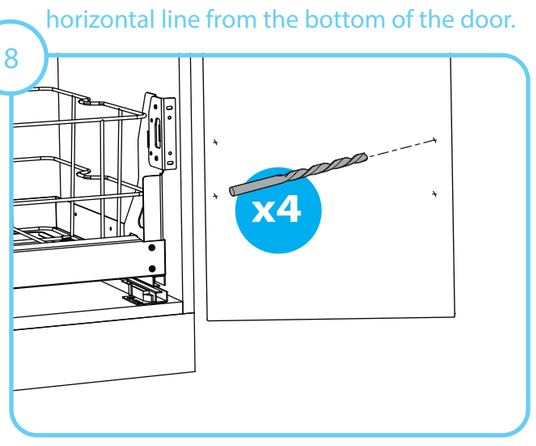

Drill bracket holes in cabinet door

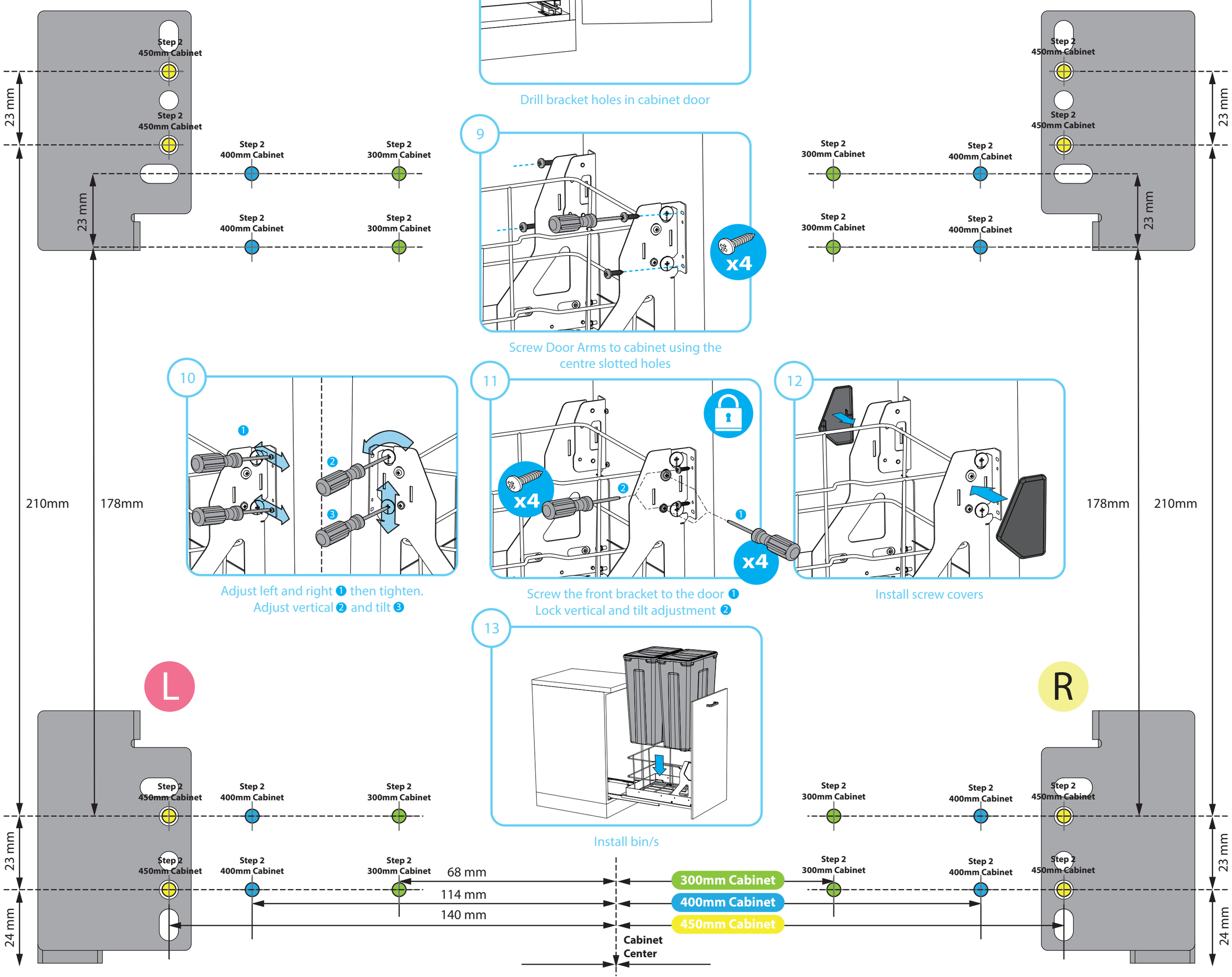

Adjust left and right ❶ then tighten.
Adjust vertical ❷ and tilt ❸

Screw the front bracket to the door ❶
Lock vertical and tilt adjustment ❷

Install screw covers

Install bin/s